Instructions - Track Drilling Supplement

Congratulations on your purchase of a specialty system from Motorized Solutions.
If you have any questions, please call technical support at 1-866-446-6867
or email us at info@motorizedsolutions.com

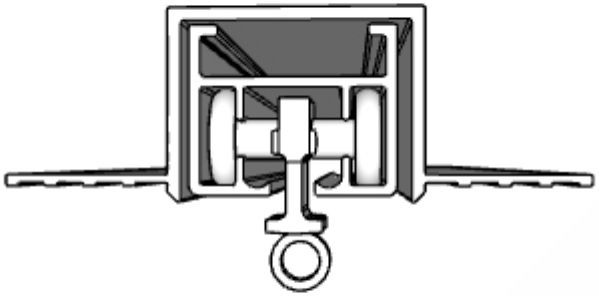

Important Notes - Please Read Before Installing

CAUTION: RISK OF FALLING OBJECTS
Securely install the system per the mounting instructions. Failure to do so could result in injury.

All mounting surfaces must be level.

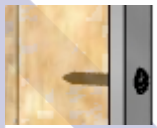

Perfect Fit and hardware are to be anchored into wood blocking. If wood blocking is not available, you must use appropriate fasteners (not included) to support the weight of the system and load.

Pre-drill all holes with the appropriate size bit.

TOOLS REQUIRED

Pencil, Tape Measure, Powered Screwdriver, Drill, Level, 1/4" Drill Bits, #6 Robertson Trim Screws, Square Screwdriver/Robertson Screwdriver.

Motorized SOLUTIONS

PerfectFit

Instructions - Track Drilling Supplement

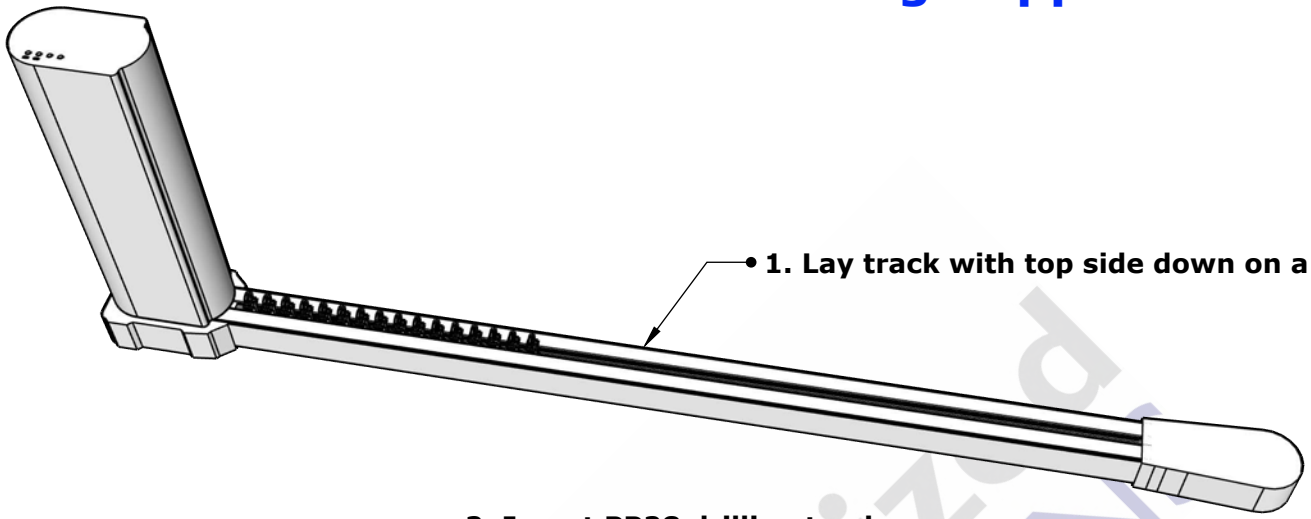

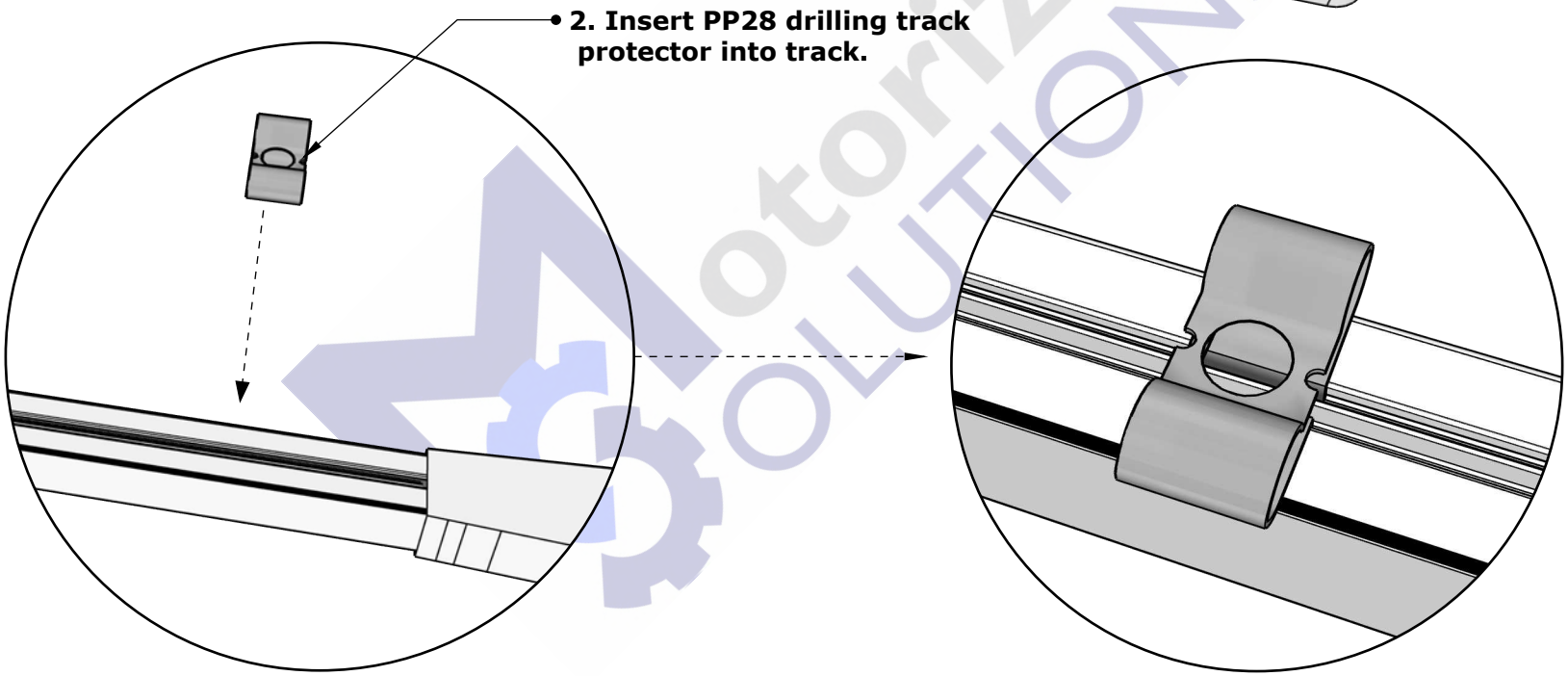

Motorized SOLUTIONS

PerfecTFit

Instructions - Track Drilling Supplement

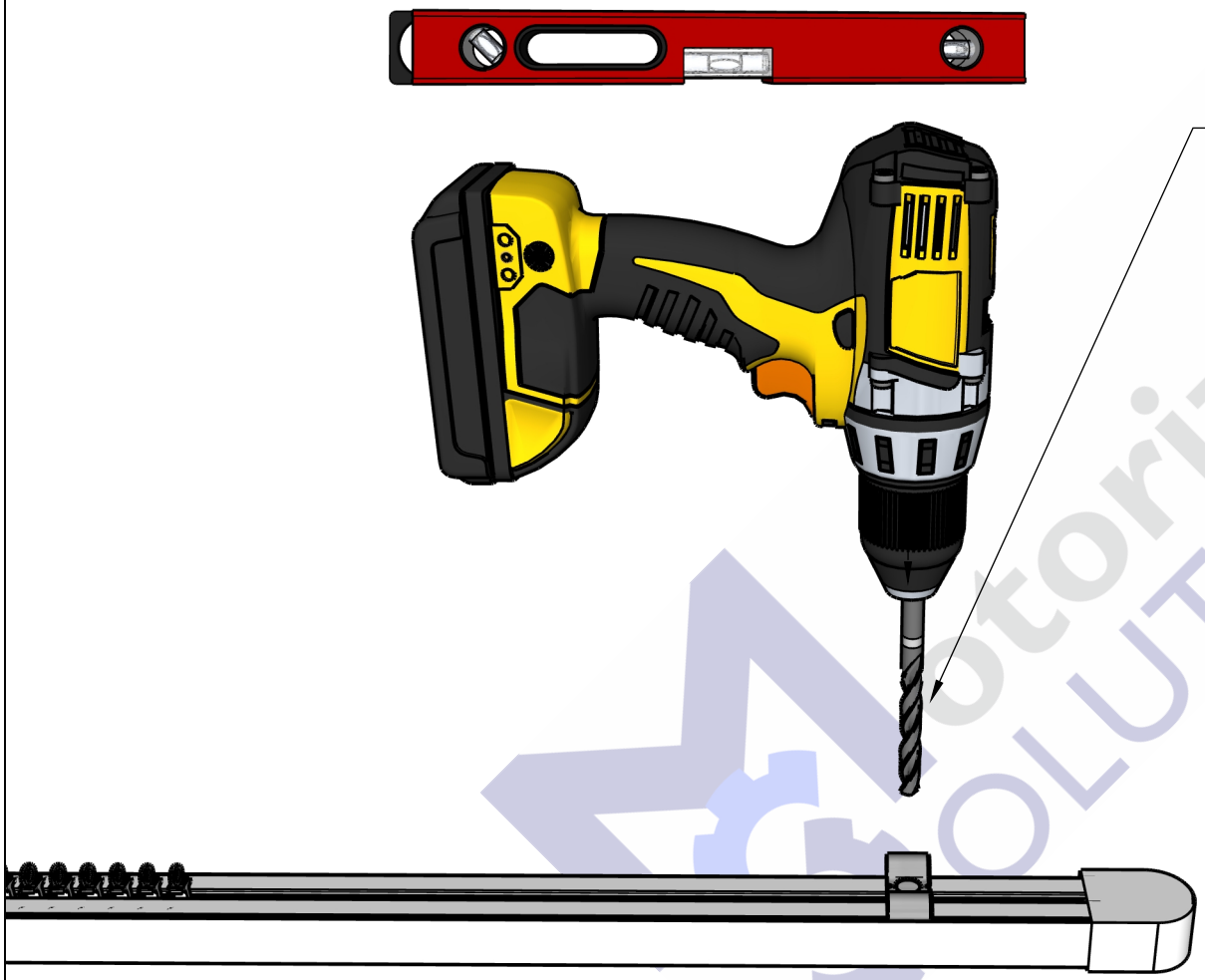

- **3. Holding the drill level, drill a 15/64" hole through the top of the track. Take caution to clear the belt, carriers, and strings connecting the carriers.**

A hole needs to be drilled and bracket used every 12".

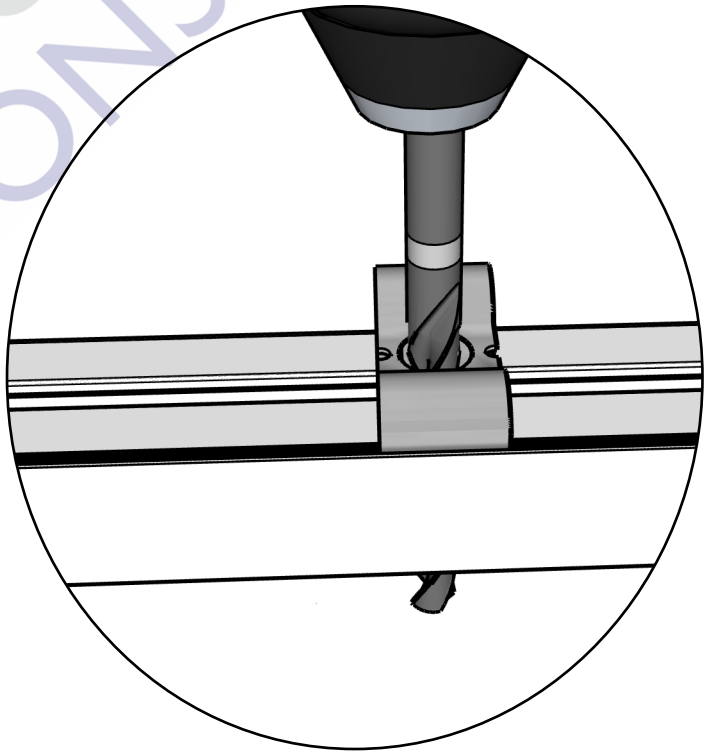

Motorized SOLUTIONS

PerfecTFit

Instructions - Track Drilling Supplement

Cam-lock Bracket Assembly

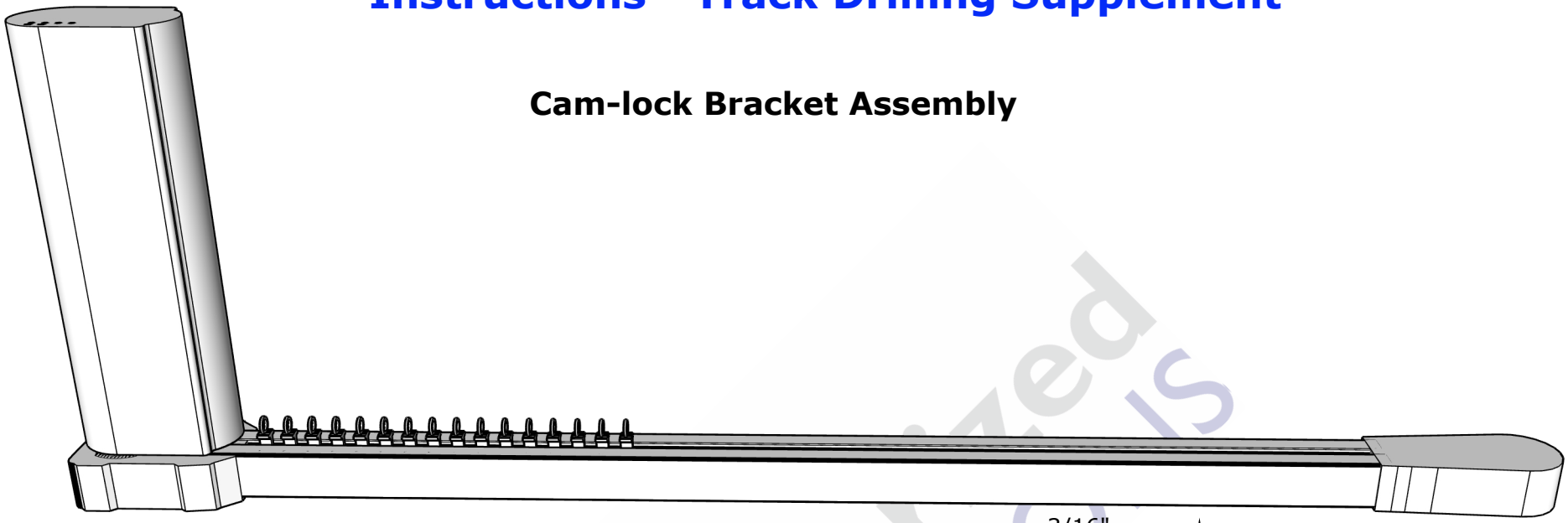

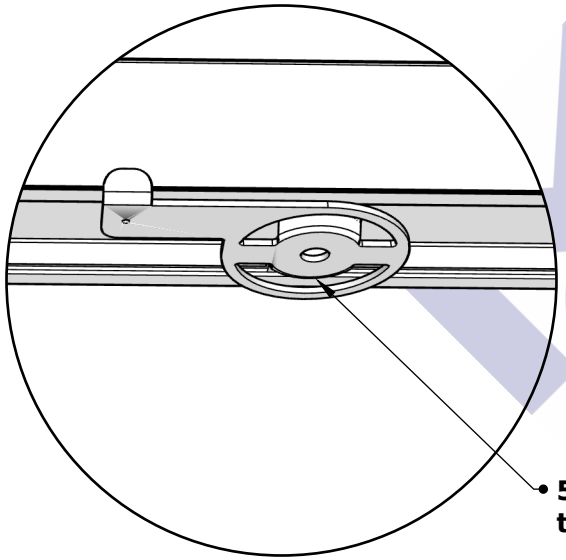

5. Twist the bracket to lock it in place.

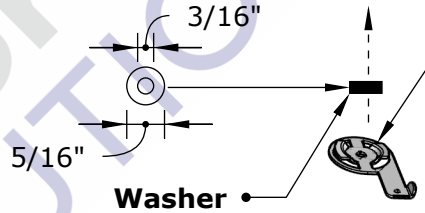

4. Place a washer over the hole. Tape the washer in place temporarily. Install the twist bracket over the washer, aligned with the hole.

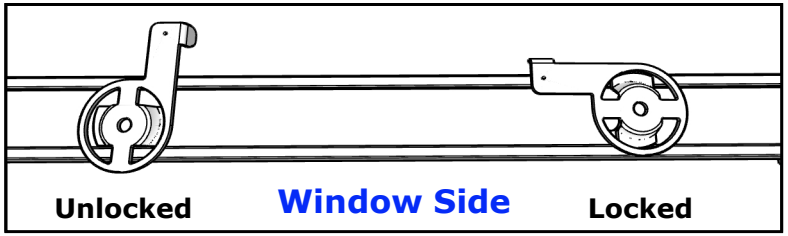

Motorized Solutions

PerfectFit

Instructions - Track Drilling Supplement

Recessed Bracket Assembly

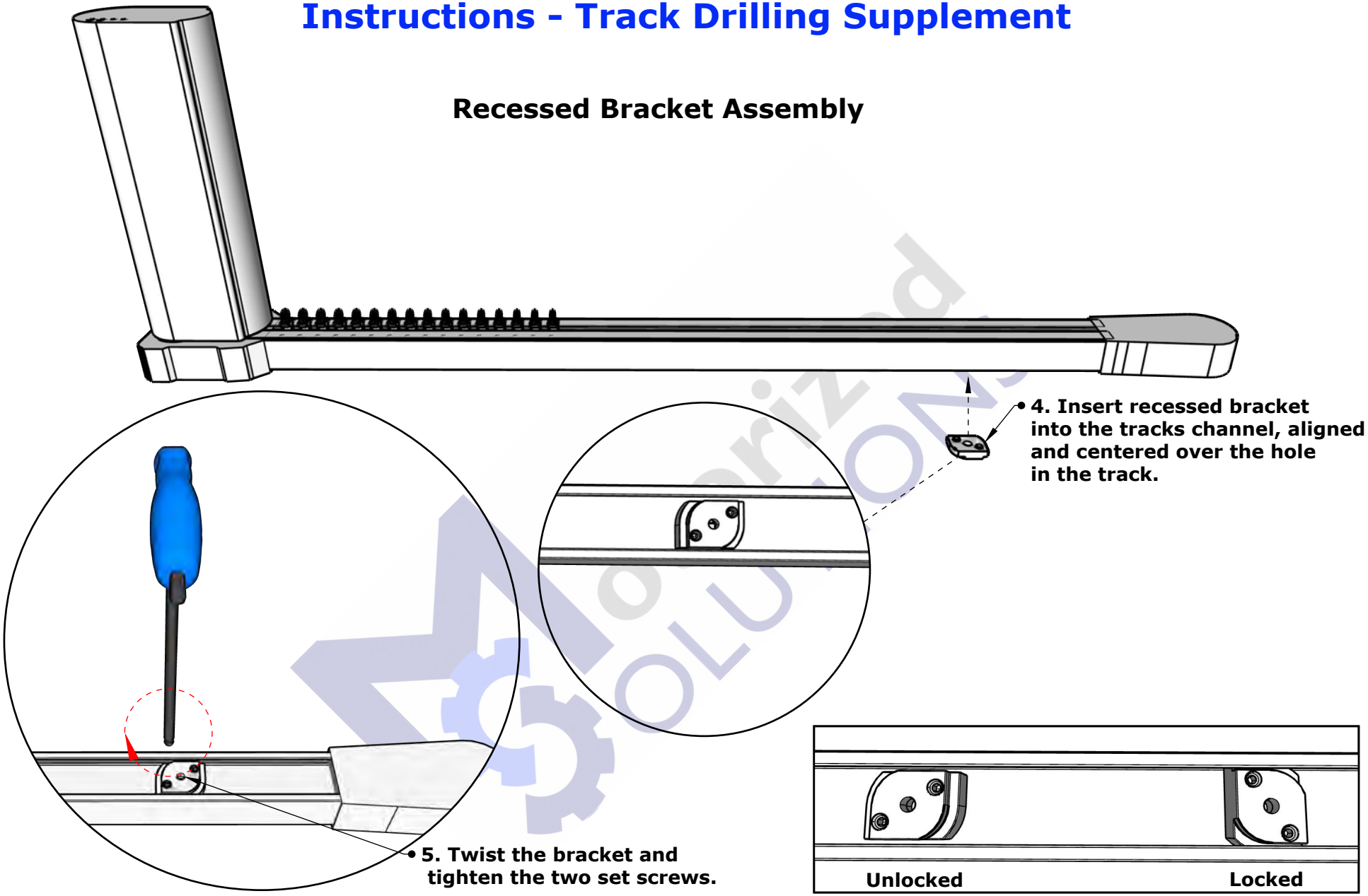

PerfecTFit

Instructions - Track Drilling Supplement

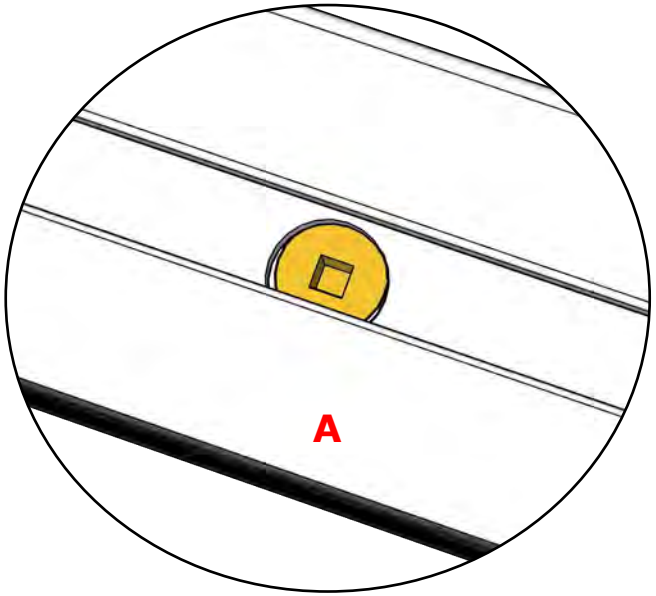

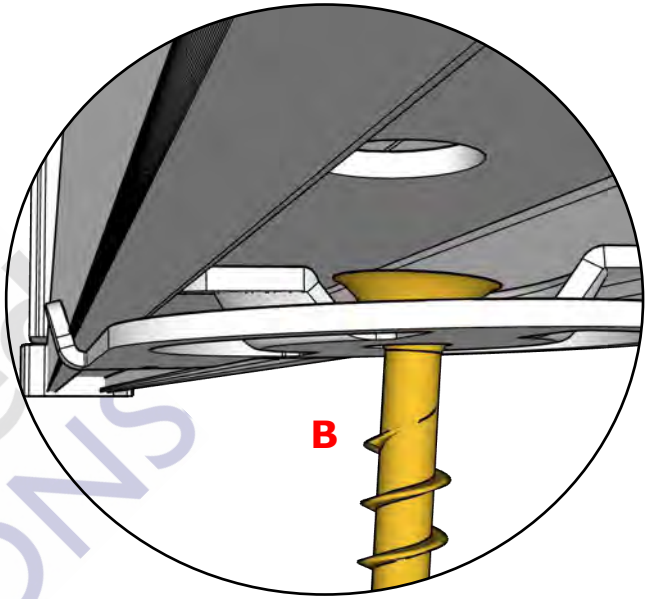

Note:The screw head will go through the hole in the track and catch the bracket. If the screw head does not go through the track, use a screw with a smaller head.

See diagrams A and B.

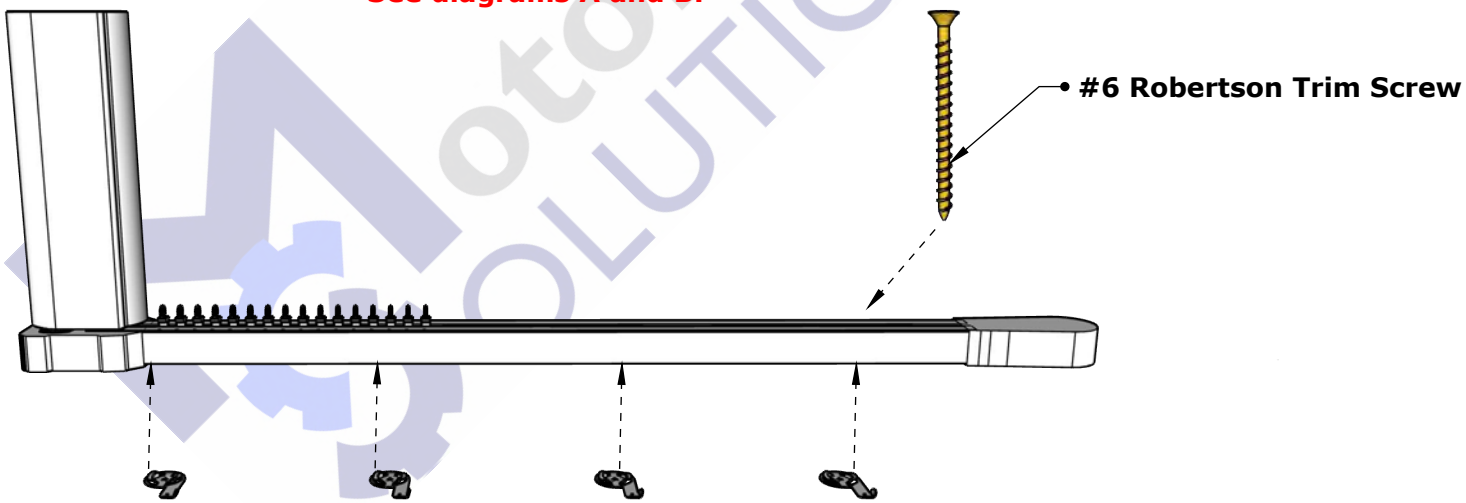

6. Repeat steps 1 through 5 for each anchor location.

Motorized SOLUTIONS

PerfecTFit